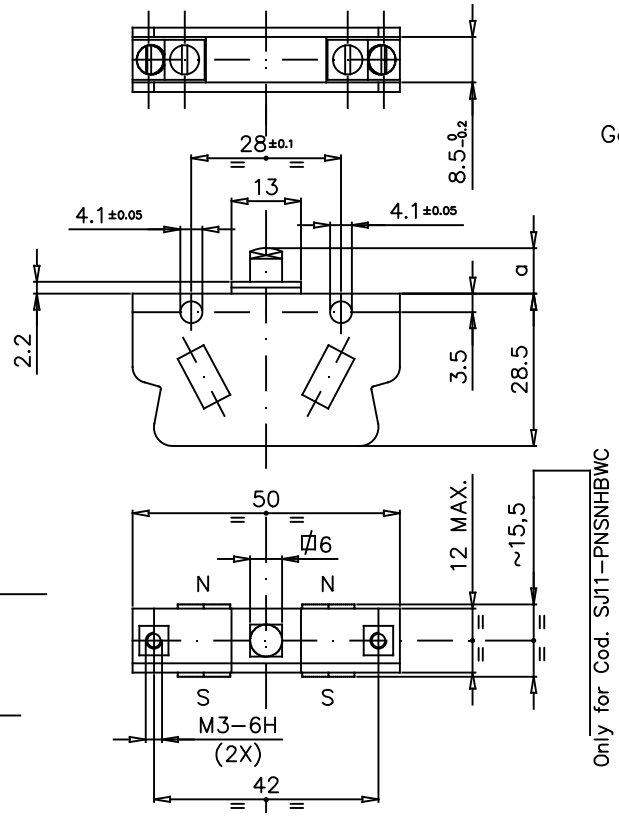

Galvanically isolated contact bridges

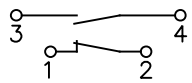

MAX. OPERATING FORCE	N 2,4±0,3
RELEASE FORCE	N 1
REST POSITION	a mm 8,8±0,25
TRIPPING POSITION	a mm 6,6±0,35
RELEASE POSITION	a mm 7,8±0,35
OVER TRAVEL LIMIT	a mm 5,65

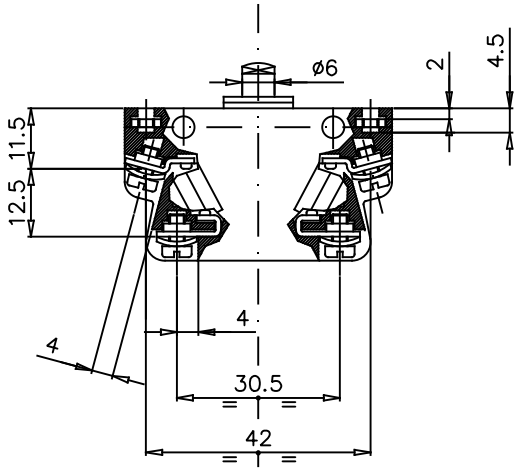

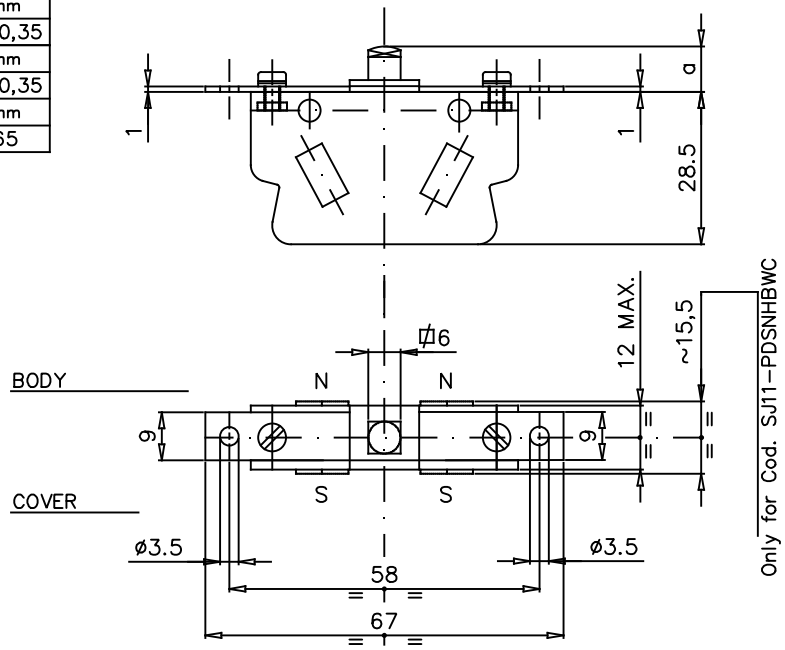

EXECUTIONS WITH FIXING DISTANCE 28 mm	
CODE	FEATURE
SJ11-PNSNHUW*	MICROSWITCH COMPLETE WITH PUSH BUTTON - STD.TYPE CONTACTS
SJ11-PNGNHUW*	MICROSWITCH COMPLETE WITH PUSH BUTTON - GOLD PLATE CONTACTS
SJ11-PNSNHBW*	MICROSWITCH COMPLETE WITH PUSH BUTTON; SOLID SILVER CONTACTS AND BLOWING MAGNETS

EXECUTIONS WITH FIXING DISTANCE 58 mm	
CODE	FEATURE
SJ11-PDSNHUW*	MICROSWITCH COMPLETE WITH PUSH BUTTON - STD.TYPE CONTACTS
SJ11-PDGNHUW*	MICROSWITCH COMPLETE WITH PUSH BUTTON - GOLD PLATE CONTACTS
SJ11-PDSNHBW*	MICROSWITCH COMPLETE WITH PUSH BUTTON; SOLID SILVER CONTACTS AND BLOWING MAGNETS

NOTE : PLACE THE PERMANENT MAGNETS SO THAT THE POLARITIES ARE AS SHOWN IN THE DRAWING

NOTE : 2 µm GOLDEN PLATING

* COVER MATERIAL	
CODE LETTER	MATERIAL
C	PC
N	PA66
P	PEI

SIMBOLI UTILIZZATI PER IDENTIFICARE LA QUOTA IN REVISIONE DI MODIFICA

##○## SIMBOLO UTILIZZATO PER LE QUOTE SOGGETTE A CONTROLLO INTERNO

MODIFICHE	MODIFICHE
1 M.D.0088 14/06/22 GM	2 C.M.0001 06/09/24 MU

	3	2	1	Rifer.
				Funz.
				Accop.
				Cliente

MATERIALE: VEDI TABELLA

TRATTAMENTO:

	DISEGNATO	APPROVATO	VISTO C.C.
DATA	12/01/16	12/01/16	12/01/16
FIRMA	GM	VELLUTINI	VELLUTINI

TOLLERANZE PER DIMENSIONI LINEARI ED ANGOLARI PRIVE DI INDICAZIONI DI TOLLERANZE SPECIFICHE UNI EN 22768-1

MOLTO GROSSOLANA ☐ GROSSOLANA ☐ MEDIA ◪ FINE ☐

SCALA 1:1

SOSTITUISCE

PESO

REVISIONE 1 2 3 4 5 6 7 8 9

ISOLEX Milano Italy

DESCRIZIONE: SNAP-ACTION STRENGTHENED OPERATING FORCE MICROSWITCH (1NO + 1 NC)

COD. VEDI TABELLA

DIS. IP118000

F. 1 DI 1

FORMATO A3