Galvanically isolated contact bridges

POSITIVE OPENING

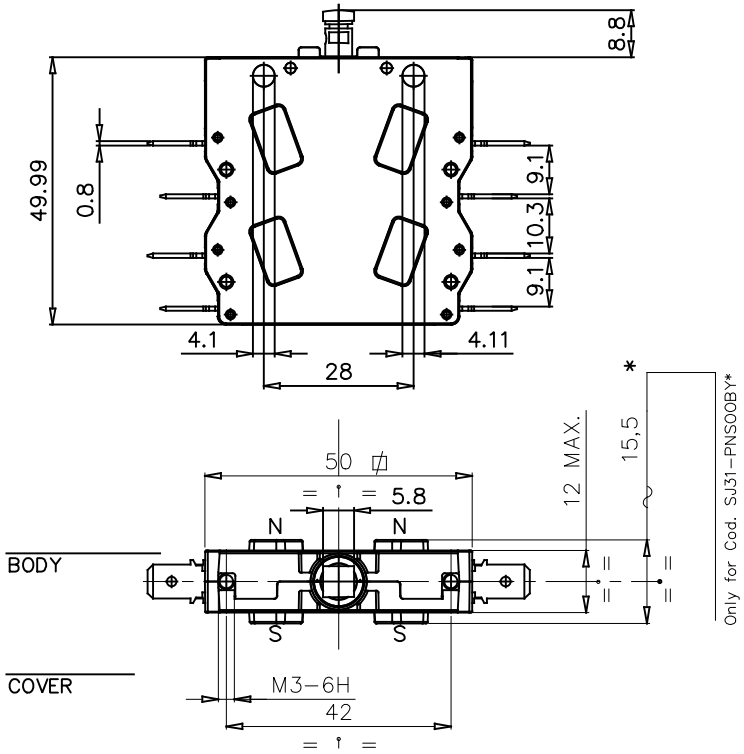

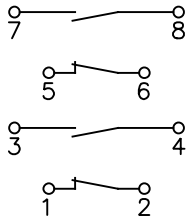

MAX. OPERATING FORCE	N 6,0±0,2
RELEASE FORCE	N 1,5
REST POSITION	a mm 8,8±0,2
TRIPPING POSITION	a mm 6,55±0,2
RELEASE POSITION	a mm 7,8±0,2
OVER TRAVEL LIMIT	a mm 5,3±0,1

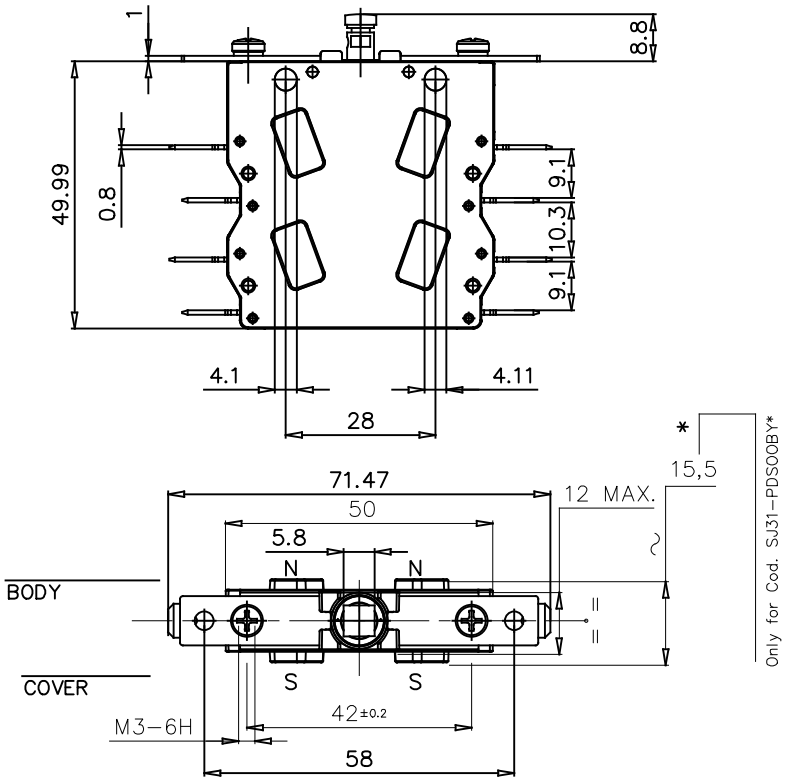

EXECUTIONS WITH FIXING DISTANCE 28 mm	
CODE	FEATURE
SJ31–PNSOOUY*	MICROSWITCH COMPLETE WITH PUSH BUTTON – STD.TYPE CONTACTS
SJ31–PNGOOUY*	MICROSWITCH COMPLETE WITH PUSH BUTTON – GOLD PLATE CONTACTS
SJ31–PNSOOBY*	MICROSWITCH COMPLETE WITH PUSH BUTTON; SOLID SILVER CONTACTS AND BLOWING MAGNETS

EXECUTIONS WITH FIXING DISTANCE 58 mm	
CODE	FEATURE
SJ31–PDSOOUY*	MICROSWITCH COMPLETE WITH PUSH BUTTON – STD.TYPE CONTACTS
SJ31–PDGOOUY*	MICROSWITCH COMPLETE WITH PUSH BUTTON – GOLD PLATE CONTACTS
SJ31–PDSOOBY*	MICROSWITCH COMPLETE WITH PUSH BUTTON; SOLID SILVER CONTACTS AND BLOWING MAGNETS

NOTE : PLACE THE PERMANENT MAGNETS SO THAT THE POLARITIES ARE AS SHOWN IN THE DRAWING

NOTE : 2 µm GOLDEN PLATING

* COVER MATERIAL	
CODE LETTER	MATERIAL
C	PC
N	PA66
P	PEI

SIMBOLI UTILIZZATI PER IDENTIFICARE LA QUOTA IN REVISIONE DI MODIFICA

##○## SIMBOLO UTILIZZATO PER LE QUOTE SOGGETTE A CONTROLLO INTERNO

MODIFICHE	
1	Rev 1 09/09/25 MU

	3	2	1	Rifer.
				Funz.
				Accop.
				Cliente

MATERIALE

TRATTAMENTO

	DISEGNATO	APPROVATO	VISTO C.C.
DATA	02/02/24	05/02/24	05/02/24
FIRMA	DESIMONE	MR	MR

TOLLERANZE PER DIMENSIONI LINEARI ED ANGOLARI PRIVE DI INDICAZIONI DI TOLLERANZE SPECIFICHE UNI EN 22768–1

MOLTO GROSSOLANA ☐ GROSSOLANA ☐ MEDIA ◪ FINE ☐

SCALA 1:1

SOSTITUISCE

A3

REVISIONE 1 2 3 4 5 6 7

ISOLEX Milano Italy

DESCRIZIONE

SNAP–ACTION MICROSWITCH SJ31 (2 N.O. + 2 N.C.)
POSITIVE OPEN

COD. VEDI TABELLA

DIS. IP10270Y

F. 1 DI 1

ACAD