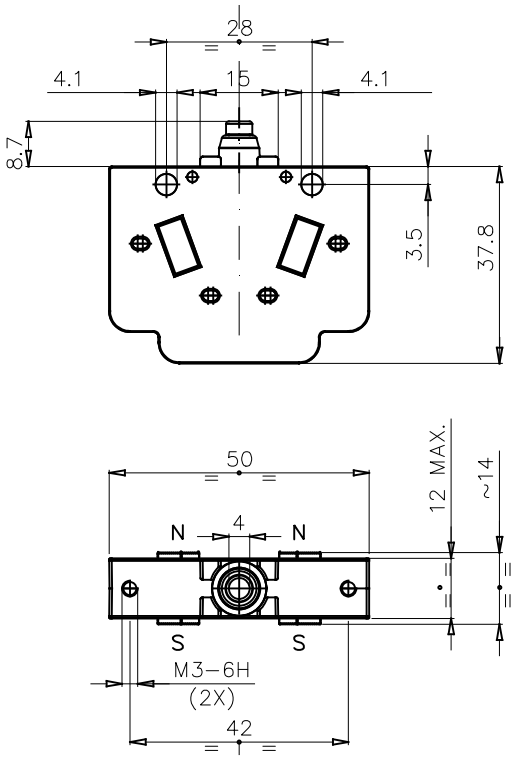
28
4.1
15
4.1
8.7
3.5
37.8
50
12 MAX.
~14
N
4
N
S
S
M3–6H
(2X)
42