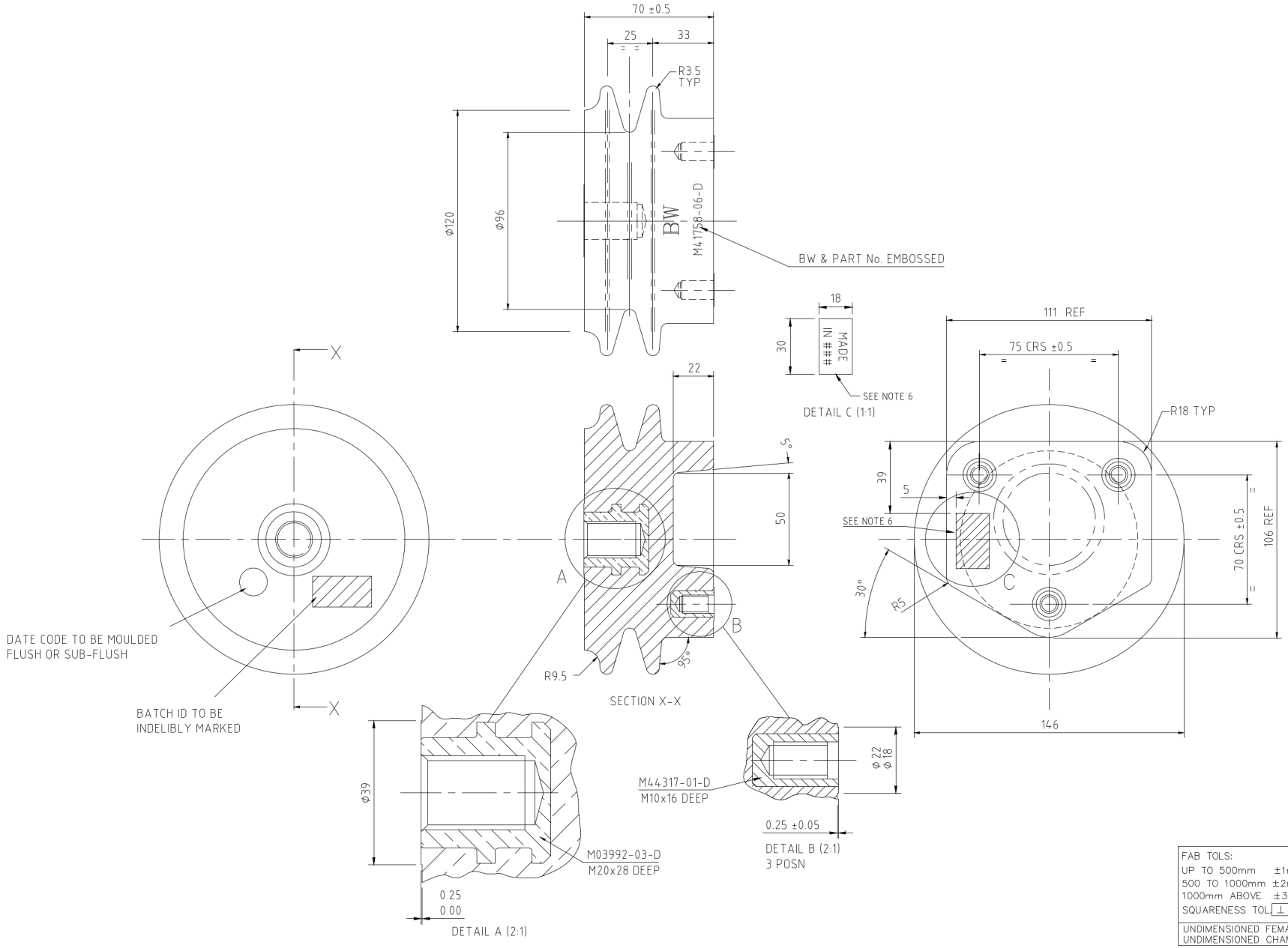

FAB TOLS:		MC/G TOLS:	
UP TO 500mm	±1mm	UP TO 500mm	±0.5mm
500 TO 1000mm	±2mm	FLATNESS TOL.	▱ 0.1
1000mm ABOVE	±3mm	ABOVE 500mm	±1.0mm
SQUARENESS TOL.	⊥ 1.0	ANGULARITY TOL.	∠ 0.1

UNDIMENSIONED FEMALE RADS ±0.2
UNDIMENSIONED CHAMFERS 1.3mm x 45°

Creepage distance	113 mm
Insulator material	Cast Cycloaliphatic epoxy resin
Brass inserts molded in	
Manufactured and Tested	TS4032
Draft angle 1°	

Quote (mm) senza indicazione di tolleranza secondo UNI EN 22768–1 grado: ☐ Fine ☑ Media ☐ Grossolana ☐ Molto grossolana
Quotes (mm) without any tolerance indication are according to UNI EN 22768–1 std's: Fine Medium Coarse Very coarse

Disegno di proprieta della ISOLEX che si riserva tutti i diritti di legge / All rights pertaining to this drawing are reserved for ISOLEX

Cliente / Customer
Conferma / Acknowledg.
N. Ordine / P. Order
Scala / Scale 1:1
Codice / Code –
File
Revisione / Revision –
A4
Foglio / Sheet 1 di / of 1

ISOLEX
Milano Italy

Descrizione – Description
Cycloaliphatic Insulator

Disegno N. – Dwg. No.
ID10361

ACAD