HP021019

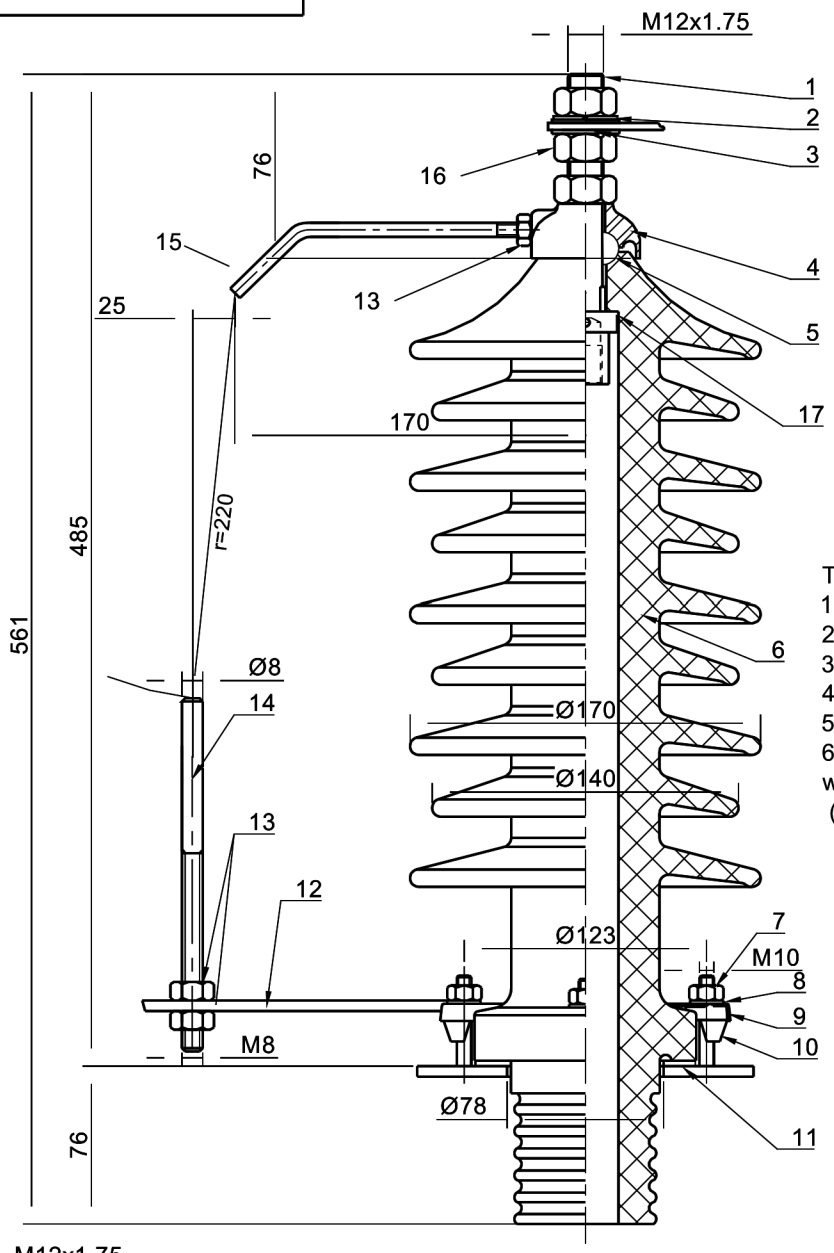

TECHINICAL SPECIFICATION

1.Highest voltage rating	36kV
2.Rated current	250A
3.Creepage distance	900mm
4.BIL rating	170kV
5.Cantilever load	1000N
6.Power frequency withstand voltage (wet/dry)	70kV/77kV

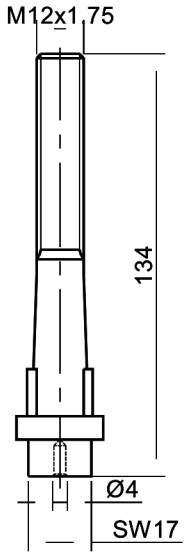

Bolt detail

ITEM NO	DESCRIPTION	MATERIALS	QTY
17	Internal gasket	Press board	1
16	Nuts	Brass	3
15	Arcing horn(Top)	Stainless steel	1
14	Arcing horn(Bottom)	Stainless steel	1
13	Nut M12	Stainless steel	3
12	Arcing support	Stainless steel	1
11	Flange gasket	NBR	1

ITEM NO	DESCRIPTION	MATERIALS	QTY
10	Clamping	Aluminium alloy	4
9	Fixing ring	Stainless steel	1
8	Washer	Stainless steel	4
7	Nut M10	Stainless steel	4
6	Bushing body	Porcelain	1
5	Ring Gasket	NBR	1
4	Cover	Brass	1
3	Washer	Brass	2
2	Spring Washer	Stainless steel	1
1	Conductor rod	Brass	1

Material	Weight
Porcelain	

	Date	Name
Drawn	2021-06-01	
Checked		
Approved		

ISOLEX
ISOLEX
Milano Italy

Drawing No.
ID10514

UNIT	SCALE	COLOUR
mm	NTS	Brown

Title
30NF630A-1080mm (DIN 42531)